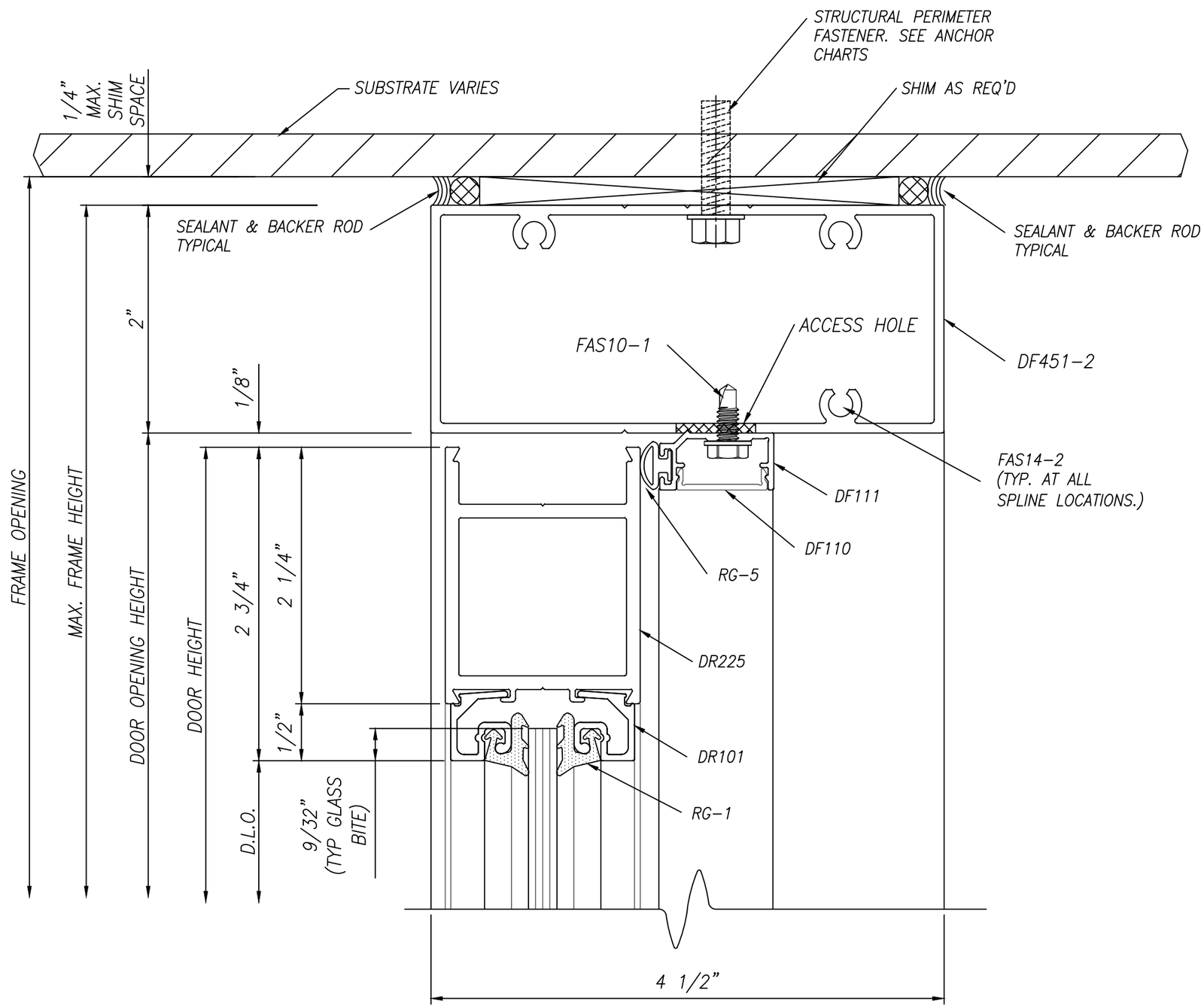
STRUCTURAL PERIMETER FASTENER. SEE ANCHOR CHARTS
1/4" MAX. SHIM SPACE
SUBSTRATE VARIES
SHIM AS REQ'D
SEALANT & BACKER ROD TYPICAL
SEALANT & BACKER ROD TYPICAL
2"
ACCESS HOLE
FAS10-1
DF451-2
1/8"
FAS14-2 (TYP. AT ALL SPLINE LOCATIONS.)
DF111
DF110
RG-5
FRAME OPENING
MAX. FRAME HEIGHT
DOOR OPENING HEIGHT
DOOR HEIGHT
2 3/4"
2 1/4"
DR225
1/2"
DR101
RG-1
D.L.O.
9/32" (TYP GLASS BITE)
4 1/2"